Warringtonfire
Holmesfield Road
Warrington
Cheshire
WA1 2DS
United Kingdom
T: +44 (0)1925 655116
W: www.warringtonfire.com

Title:

Indicative Fire Resistance Test Of Three Specimens Of 'Open-State' Cavity Barriers, Mounted Within Roof Eaves When Tested Utilising General Principles Of BS EN 1363-1: 2012 With Additional Guidelines From prEN1364-6: 201X

Report No:

406433-D Issue 3

Prepared for:

Tenmat
Ashburton Road West
Trafford Park
Manchester
M171RU

Date:

28th January 2019

Summary

Objective

The purpose of the test was to provide an indication of the fire resistance performance of three 'open-state' cavity barrier sealing systems, mounted within roof eaves when tested utilising the heating and pressure conditions of BS EN 1363-1: 2012 with additional guidelines from prEN1364-6: 201X CEN TC 127. However the full requirements of the Standard were not complied with and the information provided is for the test sponsor's information only and should not be used to demonstrate performance against the Standard nor compliance with a regulatory requirement. The test was not conducted under the requirements of UKAS accreditation.

Sponsor

Tenmat Ashburton Road West, Trafford Park, Manchester, M171RU.

Summary of the Tested Specimens

For the purpose of the test the floor specimens were referenced A to C.

The section of floor had overall dimensions of 1965 mm long by 1750 mm wide by 600 mm thick and was made up of autoclaved aerated concrete lintels arranged to provide four apertures of different lengths and widths.

Specimen A comprised of a 435 mm long x 100 mm wide x 600 mm deep aperture with a 4 mm thick x 74 mm deep Tenmat Ventilerade Brandstopp (VBS) flexible graphite based intumescent strip within a Polythene sleeve, stapled along a softwood Purlin fixed at the top of the aperture The intumescent strip was installed below a 25 mm air gap. The simulated roof eaves were completed with a Polycarbonate glazing sheet and Isover glass mineral wool insulation.

Specimen B comprised of a 435 mm long x 100 mm wide x 600 mm deep aperture with a 4 mm thick x 74 mm deep "Tenmat Ventilerade Brandstopp (VBS) flexible graphite based intumescent strip within a Polythene sleeve, stapled to the tongue and groove boards used to form the top of the simulated roof eaves. The Intumescent strip was installed above a 25 mm air gap.

Specimen C comprised of a 960 mm long x 100 mm wide x 600 mmi deep aperture with a 4 mm thick x 74 mm deep Tenmat Ventilerade Brandstopp (VBS) flexible graphite based intumescent strip within a Polythene sleeve, stapled along a softwood Purlin fixed at the top of the aperture. The intumescent strip was installed below a 25 mm air gap.

Full details of the specimens and installation methods are given in the Test Specimen and Schedule of Components section of this test report.

Test Results

If the specimens were to be assessed against the integrity and insulation (maximum temperature rise only) performance requirements specified in BS EN 1363-1: 2012 and prEN1364-6: 201X CEN TC 127, the results may be expressed as follows:
Technical failure of integrity of Specimens A to C would deem to have occurred at the start of the test due to the open void required for such seal types. However, following the expansion of the intumescent layer, full closure of the cavity of Specimens A and B were deemed to occur at 3 minutes, and full closure of Specimen C was deemed to occur at 2 minute 30 seconds. Performance of the seals can then be measured from this point.

These requirements were satisfied for the periods shown below:

Specimen	Integrity (minutes)		Insulation (minutes)
	Cotton Pad	Sustained flaming	
A	66*	66*	66*
B	66*	66*	66*
C	66*	66*	66*

* Test Duration. The test was discontinued after a period of 66 minutes.

The failure criteria of each specimen was measured after the ventilated cavities had an effective seal by the means of the intumescent properties of the products and the findings were as follows:

Specimen	Cavity fully Sealed
A	3 minutes
B	3 minutes
C	2 minutes 30 seconds

Date of Test

26th November 2018

Signatories

Responsible Officer **D. Whittle*** Technical Officer

Approved **W. Drazkiewicz*** Technical Manager

Head of Department **S. Hankey*** Business Unit Head

* For and on behalf of **Warringtonfire.**

Report Issued Date : 28th January 2019

Issue 2 – Changes made to description of intumescent strip on pages 2 and 15. Also changes made to an error of test time on page 32.
Changes made by D. Whittle 29/01/2019
Issue 3 – Change to thermocouple data on page 26, thermocouple malfunction reading taken out.
Change made by D. Whittle 22/02/2019

CONTENTS **PAGE NO.**

SUMMARY 2
SIGNATORIES 4
TEST PROCEDURE 6
TEST SPECIMEN 7
SCHEDULE OF COMPONENTS 15
INSTRUMENTATION 17
TEST OBSERVATIONS 18
TEST PHOTOGRAPHS 19
TEMPERATURE DATA 21
PERFORMANCE CRITERIA AND TEST RESULTS 30
ONGOING IMPLICATIONS 31
CONCLUSIONS 32

Test Procedure

Introduction

Cavity barriers are provided within buildings to restrict the spread of smoke and fire in concealed spaces. Cavity barriers may be 'closed' e.g in roof voids, under raised floors, between the inner and outer leaves of walls such as in timber framed construction; or they may be 'open' e.g. as used in ventilated façade systems, roof eaves, rain screen cladding systems etc.

The purpose of this test is to measure the ability of a representative specimen of a cavity barrier to resist the spread of fire from one side to another. A representative sample of a cavity barrier is exposed to a specified regime of heating and pressure. The performance of the test specimen is monitored on the basis of criteria in EN 1363-1 using only the maximum temperature rise criteria to evaluate insulation. The fire resistance of the tested construction is expressed as the time for which the appropriate criteria have been satisfied.

Fire Test Study Group/EGOLF

Certain aspects of some fire test specifications are open to different interpretations. The Fire Test Study Group and EGOLF have identified a number of such areas and have agreed Resolutions which define common agreement of interpretations between fire test laboratories which are members of the Groups. Where such Resolutions are applicable to this test they have been followed.

Instruction To Test

The test was conducted on the 26th November 2018 at the request of Tenmat, the sponsor of the test.

Mr. I. Hainsworth, Mr. C. Thompson and Mr. M. Davies representatives of the test sponsor witnessed the test.

Test Specimen Construction

A comprehensive description of the test constructions is given in the Schedule of Components. The description is based on a detailed survey of the specimens and information supplied by the sponsor of the test.

Installation

Warringtonfire supplied the floor construction. The gap sealing systems were provided and installed by the test sponsor. The building work and specimen installation took place between the 21st and 23rd November 2018.

Sampling

Warrington Certification did not take part in the selection and sampling of any products used in this test.

Conditioning

The specimens' storage, construction, and test preparation took place in the test laboratory over a total, combined time of 6 days. Throughout this period of time both the temperature and the humidity of the laboratory were measured and recorded as being within a range of from 8.5°C to 25°C and 38% to 65.5% respectively.

Test Specimen

Figure 1- General Arrangement of Thermocouple Positions - Unexposed Face.

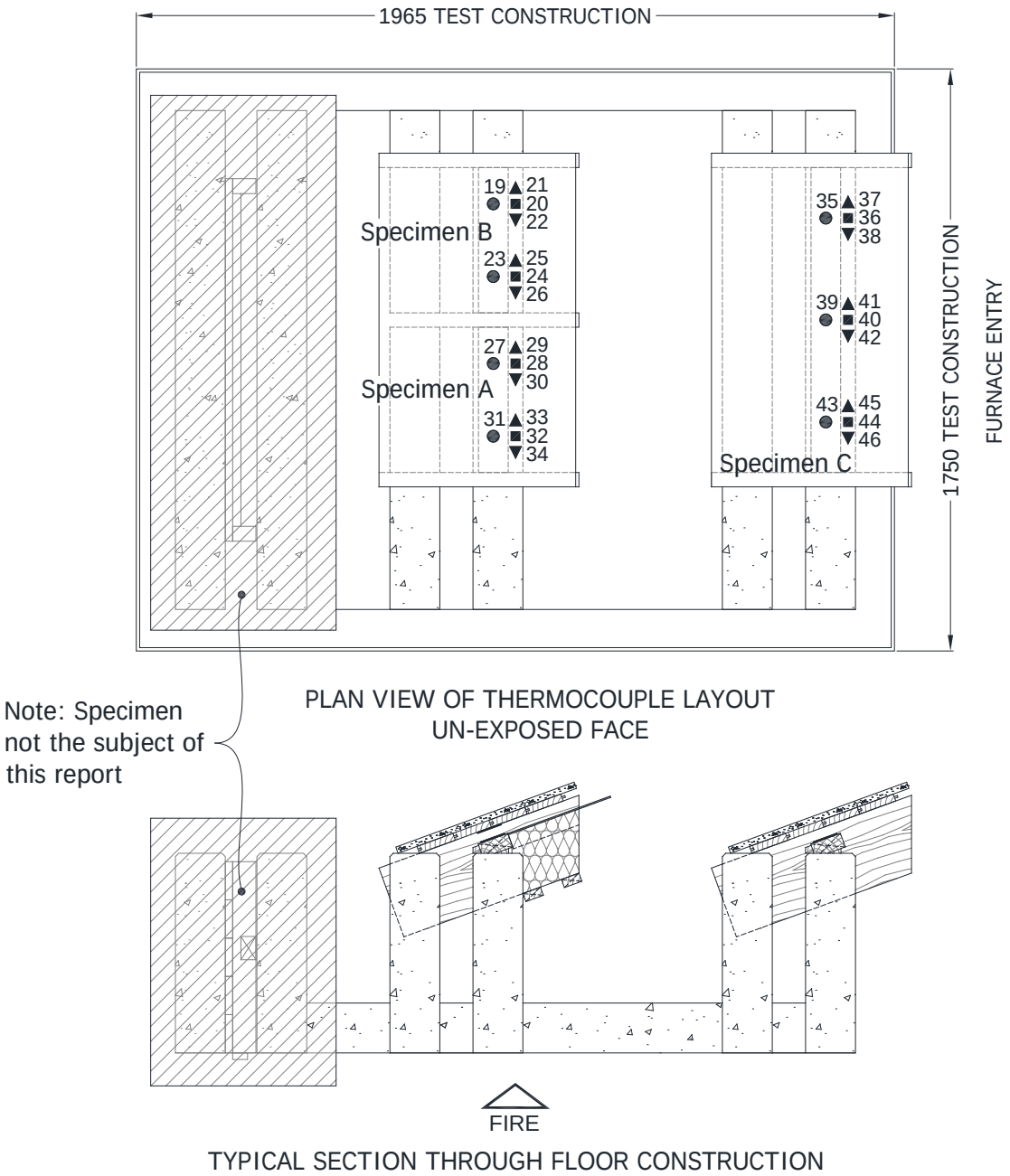

THERMOCOUPLE KEY

●/■/▲ Positions of thermocouples

- ■ Thermocouples to the unexposed face of timber purlin
- ▲ Thermocouples above and below aperture
- ● Mineral Insulated thermocouples to cavity opening

Do not scale. All dimensions are in mm

Figure 2 – Details of Thermocouple Positions – Specimens A & B.

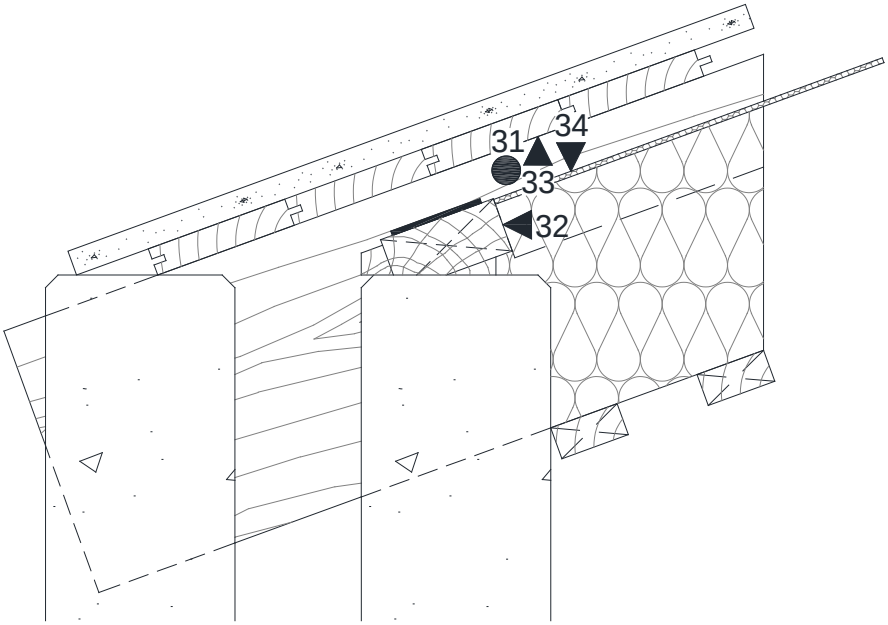

THERMOCOUPLE LAYOUT - SPECIMEN A

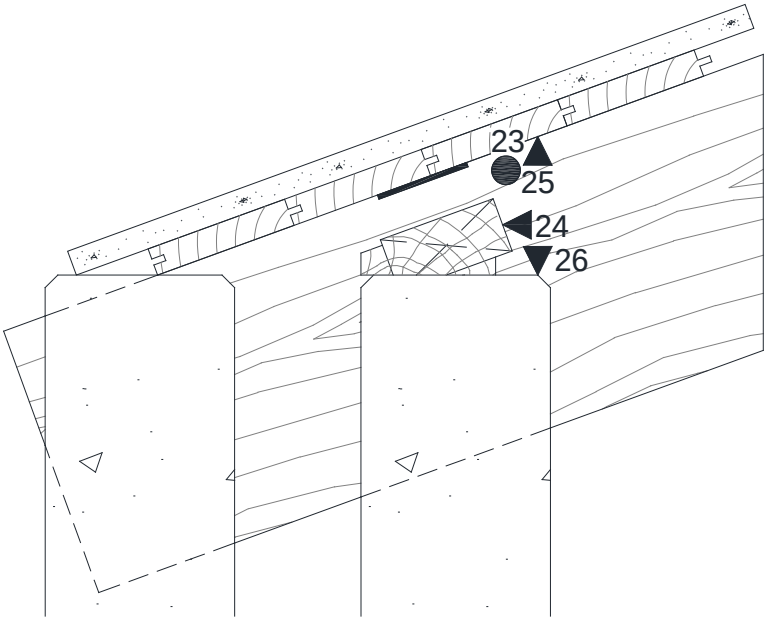

THERMOCOUPLE LAYOUT - SPECIMEN B

Do not scale. All dimensions are in mm

Figure 3 – Details of Thermocouple Positions – Specimen C.

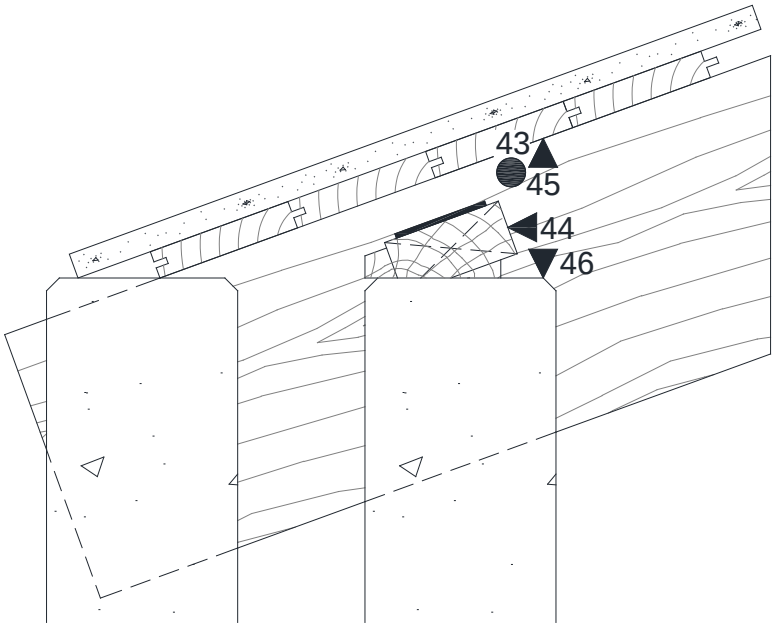

THERMOCOUPLE LAYOUT - SPECIMEN C

Do not scale. All dimensions are in mm

Figure 4 – Details of Test Construction

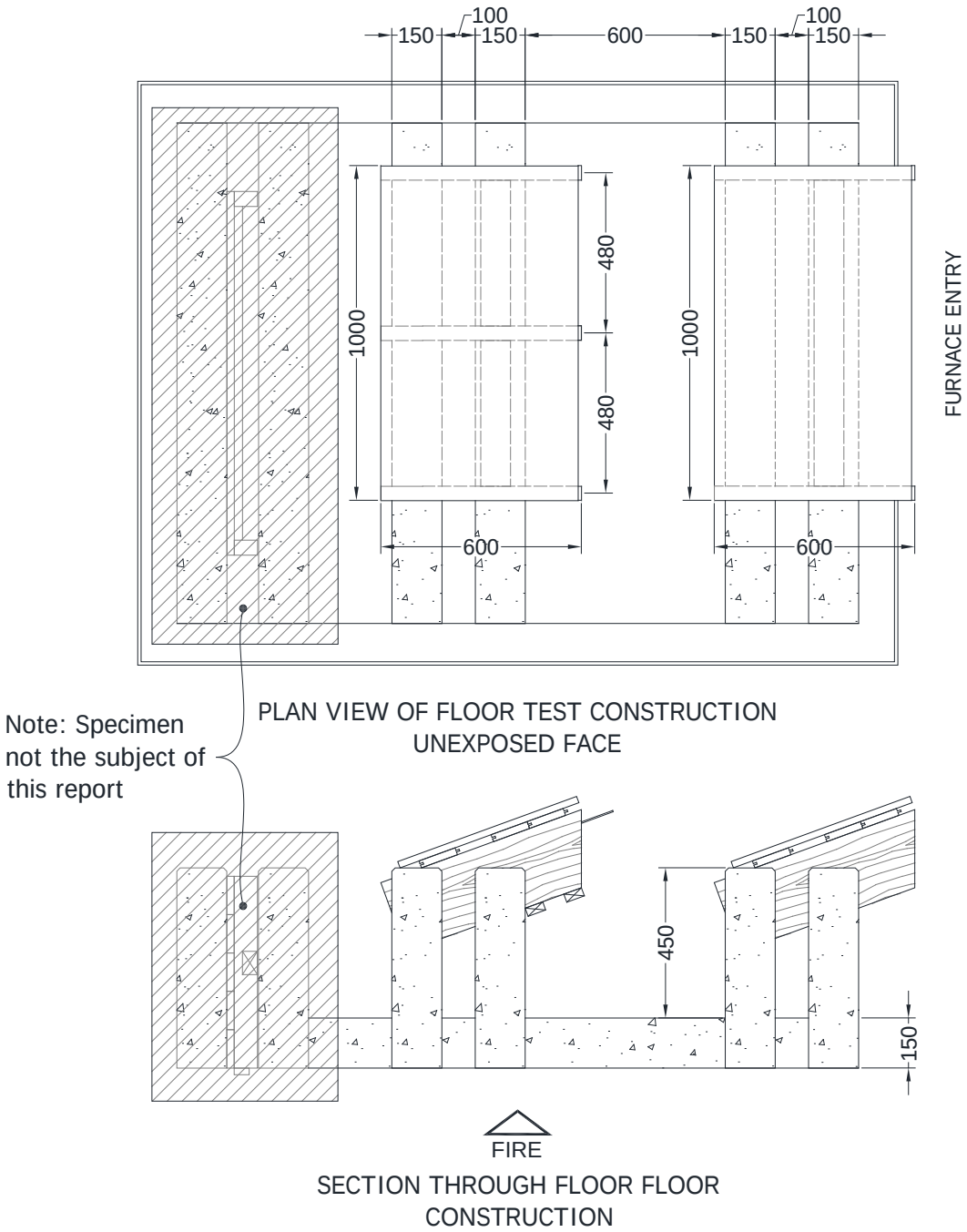

Do not scale. All dimensions are in mm

Figure 5 – Isometric view of Test Construction

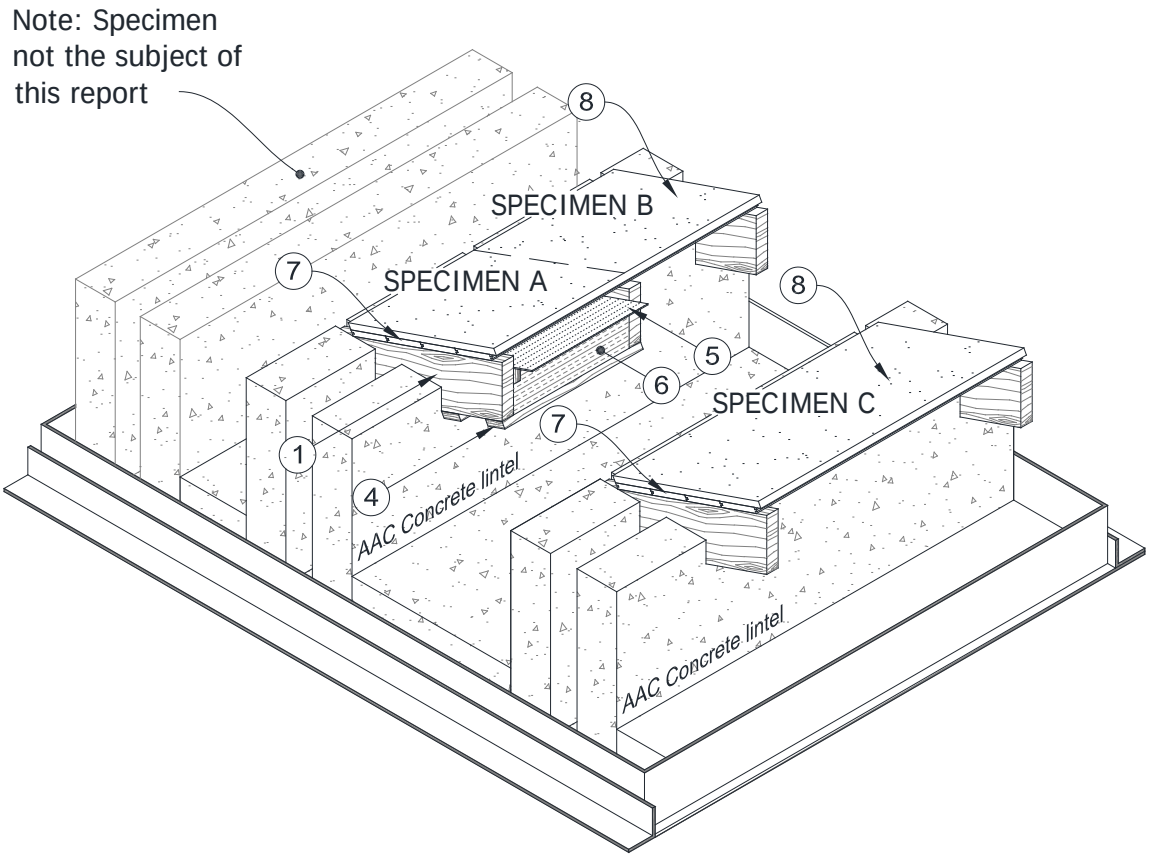

FIRE

ISOMETRIC VIEW OF TEST CONSTRUCTION

DETAILS OF SPECIMENS A - C

Do not scale. All dimensions are in mm

Figure 6 – Details of Specimen A

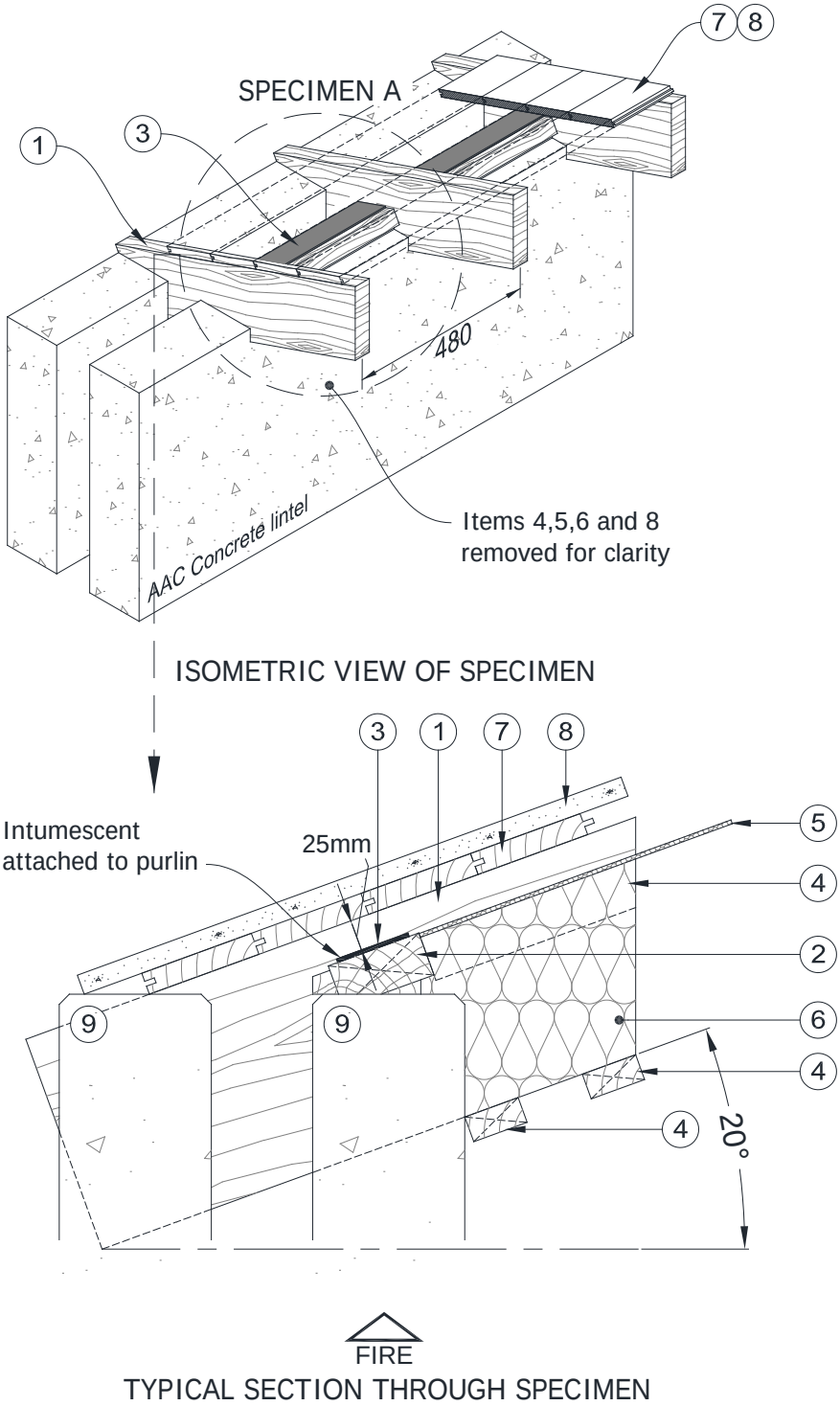

DETAILS OF SPECIMEN A

Do not scale. All dimensions are in mm

Figure 7 – Details of Specimen B

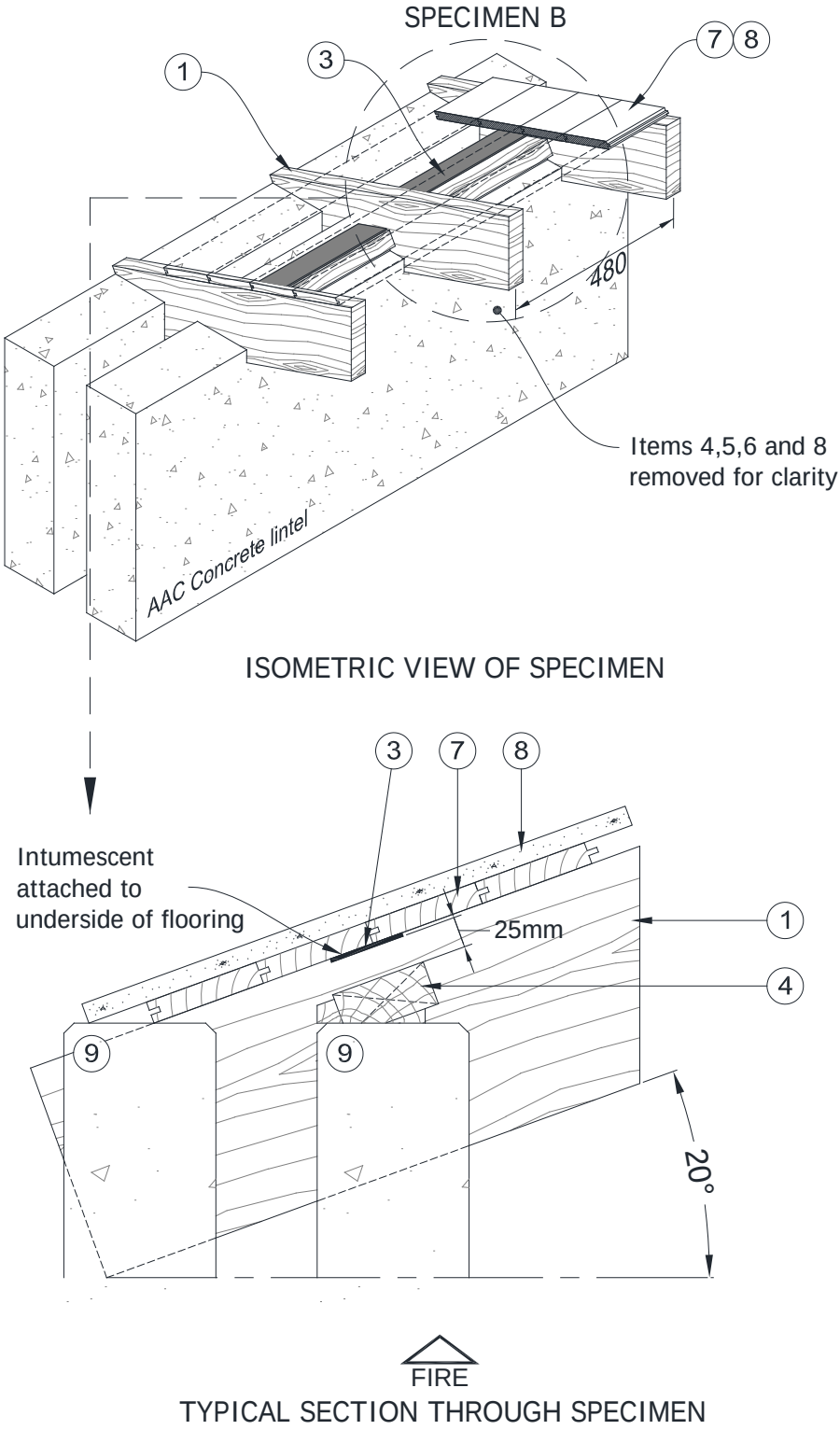

Do not scale. All dimensions are in mm

Figure 8 – Details of Specimen C

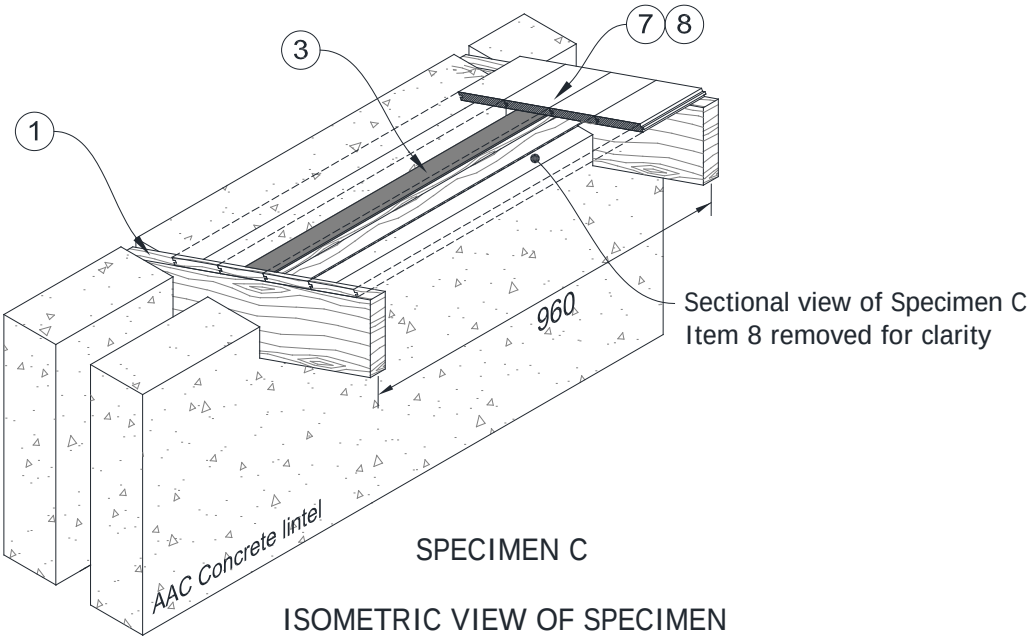

SPECIMEN C

ISOMETRIC VIEW OF SPECIMEN

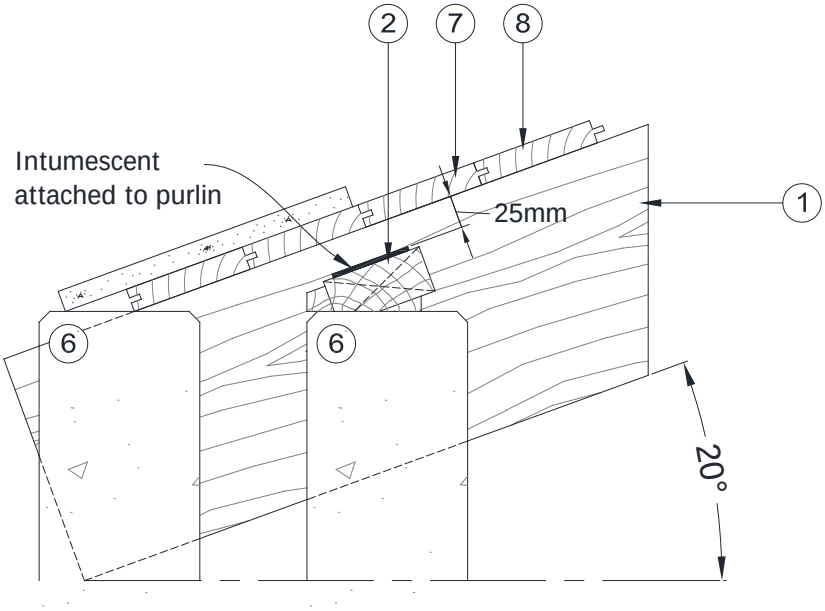

FIRE

TYPICAL SECTION THROUGH SPECIMEN

DETAILS OF SPECIMEN C

Do not scale. All dimensions are in mm

Schedule of Components

(Refer to Figures 1 to 8)
(All values are nominal unless stated otherwise)
(All other details are as stated by the sponsor)

Item		Description
1. Timber Rafter		
Manufacturer	:	Glennon timber.
Material	:	Softwood, Grade C16.
Section Size	:	220 mm x 45 mm.
Overall Length	:	640 mm
Stated Density	:	310 kg/m³
Surface Finish	:	Planed all round.
Fixing Method	:	Fixed within the AAC lintels at an angle of 20 degrees.
Fixings		
i. type	:	Countersunk head wood screws.
ii. material	:	Steel screws.
iii. size	:	60 mm long by 4.8 diameter.
2. Timber Purlins		
Manufacturer	:	Glennon timber.
Material	:	Softwood, Grade C16.
Section Size	:	95 mm x 45 mm.
Stated Density	:	310 kg/m³
Surface Finish	:	Planed all round.
Fixing Method	:	Fixed to the AAC lintels at an angle of 20 degrees. Softwood Infills used to allow proper seating of the purlin.
Fixings		
i. type	:	Countersunk head wood screws.
ii. material	:	Steel screws.
iii. size	:	60 mm long by 4.8 diameter.
3. Intumescent Wrap		
Manufacturer	:	Tenmat Ltd.
Reference	:	Tenmat Ventilerade Brandstopp (VBS)
Material	:	Flexible graphite intumescent within a Polythene sleeve
Overall size	:	
i. thickness	:	4 mm intumescent insert
ii. width	:	74 mm
Fixing method		
iii. Specimen A	:	Stapled to the Timber Purlin (item 2) with 3 No. staples
iv. Specimen B	:	Stapled to the T & G Flooring (item 7) with 3 No. staples
v. Specimen C	:	Stapled to the Timber Purlin (item 2) with 2 No. staples
4. Timber Battens		
Manufacturer	:	Glennon timber.
Material	:	Softwood, Grade C16.
Section Size	:	56 mm x 26 mm.
Stated Density	:	310 kg/m³
Surface Finish	:	Planed all round.
Fixing Method	:	Screwed to the timber Rafters.
Fixings		
i. type	:	Countersunk head wood screws.
ii. material	:	Steel screws.
iii. size	:	60 mm long by 4.8 diameter.

Item		Description
5. Glazing Sheet		
Manufacturer	:	Ariel Ltd.
Reference	:	Corotherm Twinwall.
Material	:	Polycarbonate.
Section Size	:	56 mm x 26 mm.
Fixing Method	:	Screwed to the timber Rafters.
6. Mineral Wool Insulation		
Manufacturer	:	ISOVER - Saint Gobain.
Reference	:	5200 Space Saver.
Material	:	Glass mineral wool insulation.
Roll Size	:	1160 x 9170 mm.
Thickness	:	100 mm.
Density	:	12.8 kg/m³ (measured)
Fixing Method	:	Cut to size and compressed into the void below the Glazing sheet (item 5) and supported on timber 2 No. battens (item 4).
7. Tongue and Grove Timber Flooring		
Reference	:	Tongue and grove floor boarding.
Material	:	Softwood.
Section size	:	22 x 115 mm.
Fixing Method	:	Fitted perpendicular to the Roof Truss span (item 1) 1 No. screw at each Truss position.
Fixings		
i. type	:	Countersunk head wood screws.
ii. material	:	Steel screws.
iii. size	:	60 mm long by 4.8 diameter.
8. Plasterboard		
Manufacturer	:	British Gypsum.
Material	:	Reinforced Glass Fibre.
Reference	:	Glasroc F Multiboard.
Board size	:	600 x 1000 mm.
Thickness	:	12.5 mm.
Stated Density	:	848 kg/m³
Fixing method	:	Fixed to the Tongue and grove floor boarding.
i. type	:	Countersunk head wood screws.
ii. material	:	Steel screws.
iii. size	:	60 mm long by 4.8 diameter.
9. AAC Lintel		
Material	:	Autoclaved aerated concrete slabs
Density	:	670 kg/m3
Thickness	:	150 mm
Overall size	:	600 mm wide x 1500 mm long

Instrumentation

General

The instrumentation was provided in accordance with the requirements of BS EN 1363-1: 2012 and prEN1364-6: 201X

Furnace

The furnace was controlled so that its mean temperature complied with the requirements of BS EN 1363-1: 2012 Clause 5.1 using four plate thermometers, distributed over a plane 100 mm from the surface of the horizontal test construction.

Thermocouple Allocation

Thermocouples were provided to monitor the unexposed surface of the specimens and the output of all instrumentation was recorded at no less than one minute intervals. The locations and reference numbers of the various unexposed surface thermocouples, and the suspended thermocouples are shown in Figures 1 to 3.

Roving Thermocouple

A roving thermocouple was available to measure temperatures on the unexposed surface of the specimens at any position, which might appear to be hotter than the temperatures indicated by the fixed thermocouples.

Integrity Criteria

The integrity of each specimen was assessed against the criteria as described in BS EN 1363-1: 2012, except that gap gauges were not used during the test.

Furnace Pressure

After the first five minutes of testing, the furnace pressure was controlled to maintain a slightly positive pressure relative to the pressure of the laboratory. The furnace atmospheric pressure was measured and controlled such that, at a position 400 mm below the underside of the cavity barriers, the differential pressure was calculated to be 20 (±2) Pa.

Test Observations

Time		
		All observations are from the unexposed face unless noted otherwise.
mins	secs	The ambient air temperature in the vicinity of the test construction was 11ºC at the start of the test with a maximum variation of +2ºC during the test.
00	00	**The test commences.**
00	30	Smoke release from all specimens.
00	40	All he intumescent strips on the specimens have started react and close the air gaps.
01	30	All specimens air gaps have closed over 50%.
02	30	Specimen C has fully closed.
03	00	Specimen A and B have fully closed.
05	00	No flaming was observed in the cavities.
15	00	No significant visible change.
30	00	Smoke release continues from all cavities.
35	00	Slight discolouring to timber of specimen B and C.
45	00	No significant visible change.
50	00	Smoke release has increased from behind the tongue and grove board on all specimens.
52	00	Large amounts of smoke release from under the board of Specimen C.
60	00	Discolouring on the tongue and grove board above Specimen C.
66	30	**Test discontinued.**

Test Photographs

The unexposed face of the floor construction at the start of the test

The unexposed face of the floor construction after a test duration of 15 minutes

The unexposed face of the floor construction after a test duration of 30 minutes

The unexposed face of the floor construction after a test duration of 60 minutes

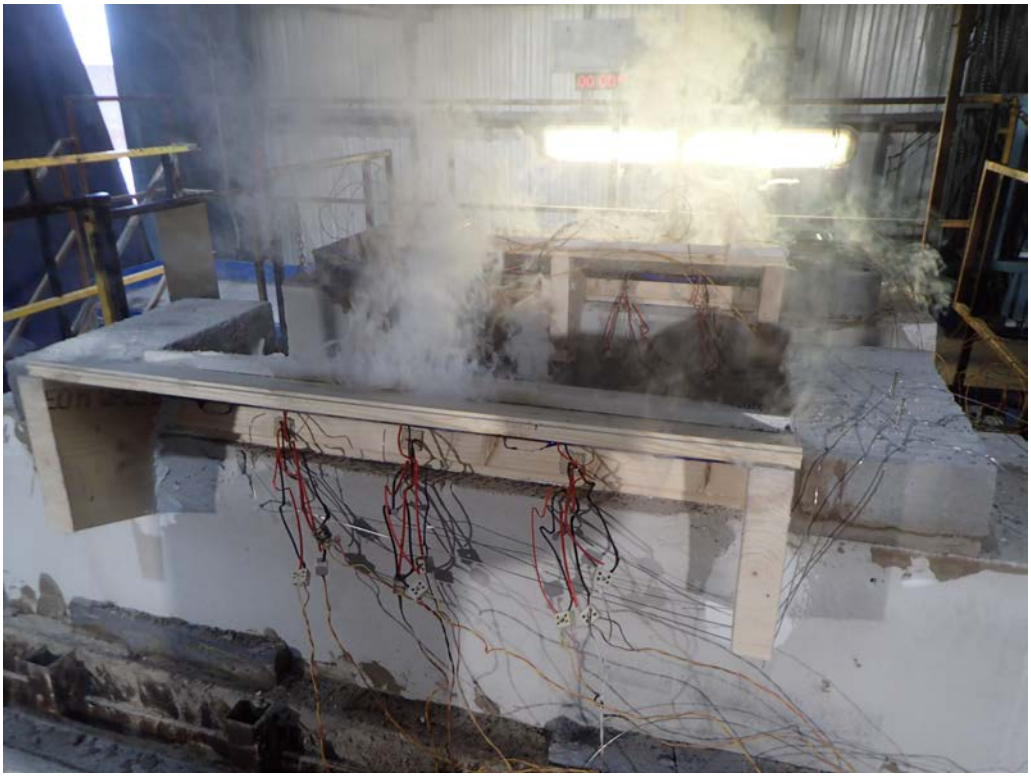

Temperature Data

Mean Furnace Temperature, Together With The Temperature/Time Relationship Specified In BS EN 1363-1: 2012

Time Mins	Specified Furnace Temperature Deg. C	Actual Furnace Temperature Deg. C
0	20	11
2	445	561
4	544	626
6	603	642
8	645	650
10	678	659
12	705	691
14	728	739
16	748	760
18	766	773
20	781	782
22	796	792
24	809	801
26	820	812
28	832	821
30	842	833
32	851	843
34	860	853
36	869	864
38	877	876
40	885	885
42	892	894
44	899	902
46	906	909
48	912	916
50	918	924
52	924	931
54	930	937
56	935	943
58	940	948
60	945	954
62	950	958
64	955	962
66	960	968

Individual Temperatures Recorded On Specimen A

Time Mins	T/C Number 28 Deg. C	T/C Number 29 Deg. C	T/C Number 30 Deg. C	T/C Number 32 Deg. C	T/C Number 33 Deg. C	T/C Number 34 Deg. C
0	9	11	10	14	10	10
1	13	16	11	*	16	15
2	48	44	40	*	43	57
3	51	44	40	*	41	52
4	46	47	37	*	40	48
5	41	50	34	42	41	43
6	38	51	32	40	41	40
8	32	56	28	38	45	40
10	29	58	27	40	45	39
12	28	58	27	41	45	37
14	28	60	27	42	44	34
16	28	59	27	41	42	32
18	28	59	28	40	43	31
20	28	62	28	38	46	30
22	28	63	28	35	53	29
24	28	62	28	35	55	30
26	27	63	28	35	56	30
28	27	63	28	36	58	30
30	27	63	28	36	59	30
32	27	62	28	37	59	30
34	27	63	28	37	60	30
36	27	63	28	37	61	30
38	27	62	28	37	61	30
40	28	63	28	37	62	30
42	28	62	29	38	61	30
44	28	63	28	38	62	31
46	28	60	29	38	60	31
48	28	61	29	38	60	30
50	28	63	29	38	60	30
52	28	63	29	39	62	31
54	28	62	29	39	62	31
56	29	63	29	40	63	31
58	29	62	30	39	62	31
60	30	62	30	39	62	31
62	30	63	31	39	63	31
64	30	63	31	39	64	31
66	30	63	31	39	64	31

* Thermocouple Malfunction

Individual Temperatures Recorded By The Suspended Thermocouples Above The Cavity Of Specimen A

Time Mins	T/C Number 27 Deg. C	T/C Number 31 Deg. C
0	10	10
1	181	186
2	108	146
3	73	63
4	45	44
5	32	32
6	30	27
8	34	27
10	32	26
12	33	26
14	32	25
16	31	25
18	32	25
20	32	26
22	28	26
24	25	26
26	25	26
28	25	26
30	25	25
32	23	26
34	27	25
36	26	25
38	27	26
40	26	26
42	26	26
44	26	27
46	28	26
48	26	26
50	26	26
52	27	27
54	26	26
56	28	26
58	29	28
60	29	27
62	30	28
64	31	28
66	33	30

Individual Temperatures Recorded On Specimen B

Time Mins	T/C Number 20 Deg. C	T/C Number 21 Deg. C	T/C Number 22 Deg. C	T/C Number 24 Deg. C	T/C Number 25 Deg. C	T/C Number 26 Deg. C
0	10	11	10	10	10	8
1	11	18	10	10	22	9
2	13	46	12	16	65	13
3	14	46	12	20	66	14
4	14	49	13	21	64	14
5	15	50	13	21	62	14
6	15	50	13	21	61	14
8	16	52	13	21	61	14
10	17	54	13	21	60	14
12	18	54	14	22	60	14
14	18	53	14	22	60	14
16	19	52	14	21	58	13
18	19	50	14	21	53	13
20	20	55	14	21	56	13
22	20	57	14	21	56	13
24	20	55	14	22	57	14
26	21	57	14	22	58	14
28	21	58	14	22	56	14
30	21	60	14	22	54	14
32	22	59	14	22	52	14
34	22	60	15	22	51	14
36	22	60	15	22	51	14
38	22	60	15	22	51	14
40	23	56	15	23	52	14
42	23	54	15	23	52	15
44	23	55	15	23	52	15
46	23	56	15	23	49	15
48	24	56	16	23	50	15
50	24	56	16	24	51	15
52	24	56	16	24	51	15
54	25	58	17	24	51	15
56	25	57	17	25	51	15
58	25	57	17	25	51	15
60	26	57	18	25	52	16
62	27	58	19	26	54	16
64	27	59	19	26	53	16
66	28	59	20	27	54	16

Individual Temperatures Recorded By The Suspended Thermocouples Above The Cavity Of Specimen B

Time Mins	T/C Number 19 Deg. C	T/C Number 23 Deg. C
0	10	4
1	47	69
2	132	227
3	98	105
4	62	27
5	22	14
6	17	11
8	16	10
10	16	11
12	16	12
14	15	*
16	15	*
18	15	*
20	15	12
22	15	11
24	15	10
26	15	11
28	16	9
30	16	9
32	16	9
34	16	9
36	16	9
38	16	9
40	16	10
42	16	10
44	16	10
46	16	10
48	17	10
50	16	10
52	17	10
54	17	11
56	17	10
58	17	10
60	18	11
62	18	10
64	18	11
66	18	11

* Thermocouple Malfunction

Individual Temperatures Recorded On Specimen C

Time Mins	T/C Number 36 Deg. C	T/C Number 37 Deg. C	T/C Number 38 Deg. C	T/C Number 40 Deg. C	T/C Number 41 Deg. C	T/C Number 42 Deg. C	T/C Number 44 Deg. C	T/C Number 45 Deg. C	T/C Number 46 Deg. C
0	11	10	10	7	6	7	7	6	8
1	12	42	10	7	*	*	7	*	8
2	16	109	*	*	*	*	*	*	6
3	17	93	*	*	*	*	*	*	6
4	17	83	*	*	*	*	*	95	5
5	17	74	9	9	*	*	10	82	8
6	18	69	10	10	54	*	10	74	8
8	18	64	10	11	55	7	11	67	8
10	18	60	10	12	55	7	11	62	9
12	19	56	11	13	56	7	12	57	9
14	19	55	11	13	57	7	12	56	9
16	19	54	11	14	59	8	13	56	9
18	20	51	11	14	54	8	13	52	9
20	20	54	11	15	59	8	14	53	9
22	21	54	11	16	59	8	14	52	10
24	21	52	11	16	57	8	14	50	10
26	21	52	12	17	59	8	15	51	10
28	22	52	12	17	56	8	15	48	10
30	22	52	12	17	57	9	15	49	10
32	22	50	12	18	56	9	16	49	10
34	23	50	12	19	58	9	16	49	10
36	23	50	12	19	59	9	17	51	10
38	24	50	12	20	58	9	17	51	11
40	24	51	12	20	57	9	17	50	11
42	24	49	12	20	48	9	18	46	11
44	25	50	13	20	49	10	18	46	11
46	25	49	13	20	41	10	19	43	11
48	26	49	13	21	48	10	19	44	11
50	26	49	13	22	51	10	20	46	12
52	27	49	14	22	50	10	20	47	12
54	28	49	14	23	49	11	21	47	12
56	28	48	14	23	51	11	21	49	13
58	29	48	14	24	49	11	22	48	13
60	29	49	15	24	48	12	22	49	14
62	30	50	15	25	45	12	23	50	14
64	31	48	15	26	47	12	24	52	15
66	31	48	16	26	46	13	25	53	16

Individual Temperatures Recorded By The Suspended Thermocouples Above The Cavity Of Specimen C

Time Mins	T/C Number 35 Deg. C	T/C Number 39 Deg. C	T/C Number 43 Deg. C
0	10	8	7
1	71	42	*
2	48	22	*
3	22	13	*
4	17	11	13
5	16	12	8
6	16	11	7
8	16	12	7
10	16	12	7
12	17	13	8
14	16	12	8
16	16	13	9
18	16	12	9
20	17	14	11
22	18	14	10
24	17	13	9
26	19	14	10
28	18	15	9
30	18	14	12
32	18	14	10
34	20	15	11
36	18	15	12
38	18	16	13
40	19	16	11
42	21	16	11
44	24	17	12
46	21	16	11
48	24	17	12
50	21	18	12
52	22	17	13
54	23	19	13
56	22	20	15
58	24	19	13
60	22	19	14
62	25	18	14
64	22	20	14
66	24	19	15

Table Showing Recorded Furnace Pressure 450mm Below The Floor Construction

Time Mins	Recorded Pressure Pascals
0	0.0
2	23.4
4	18.0
6	14.3
8	19.4
10	16.2
12	19.1
14	15.5
16	17.4
18	5.0
20	18.3
22	16.8
24	11.8
26	18.0
28	16.5
30	18.5
32	14.6
34	18.0
36	18.6
38	17.5
40	20.3
42	16.9
44	19.3
46	12.8
48	15.2
50	17.1
52	18.6
54	19.0
56	17.5
58	15.3
60	16.5
62	18.6
64	17.6
66	19.2

Graph Showing Mean Furnace Temperature, Together With The Temperature/Time Relationship Specified In BS EN 1363-1: 2012

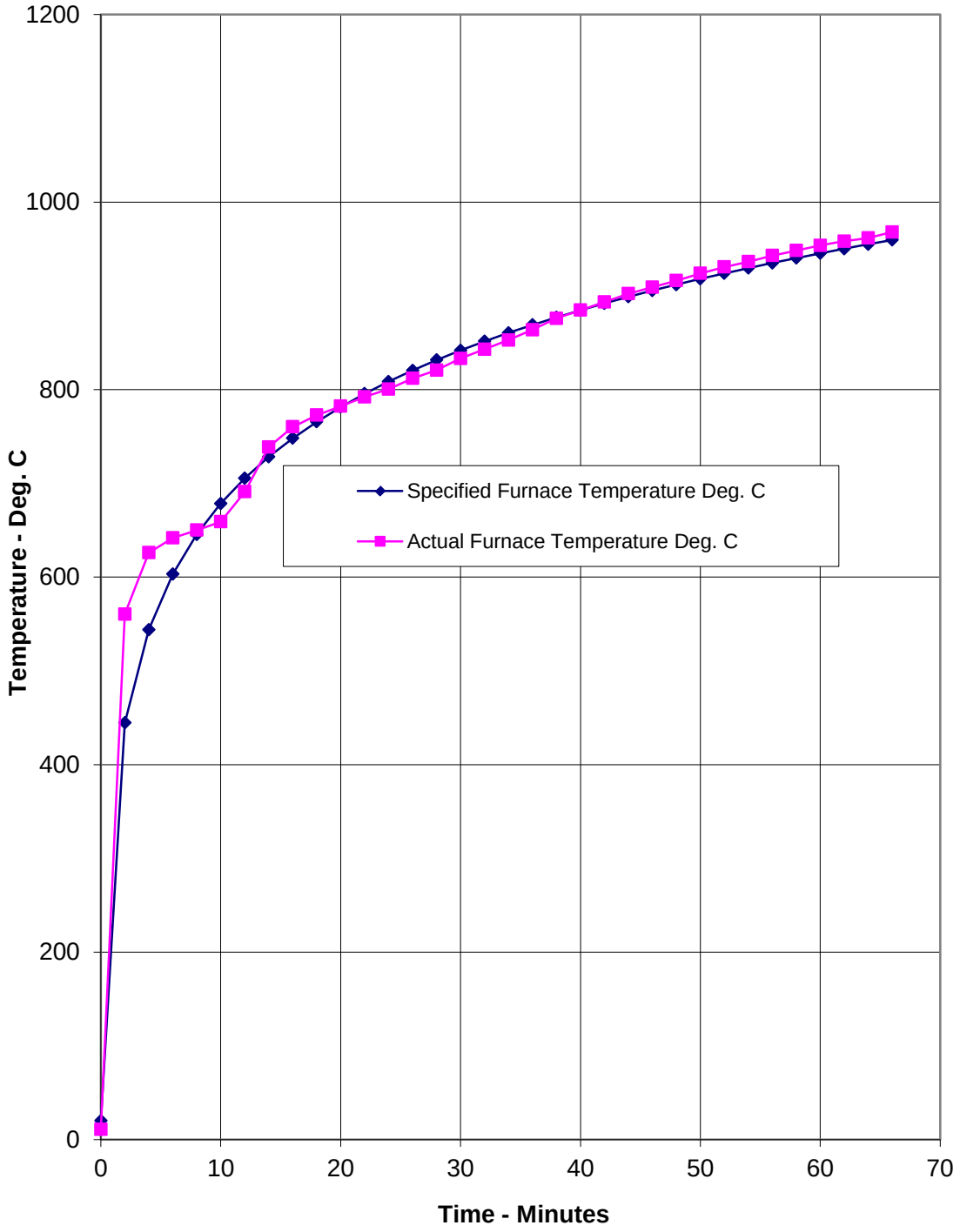

Performance Criteria and Test Results

If the specimens were to be assessed against the integrity and insulation (maximum temperature rise only) performance requirements specified in BS EN 1363-1: 2012 and prEN1364-6: 201X CEN TC 127, the results may be expressed as follows:

Integrity

It is required that the specimens retain their separating function, without either causing ignition of a cotton pad when applied as specified in BS EN 1363-1: 2012, or resulting in sustained flaming on the unexposed surface.

Technical failure of integrity of Specimens A to C would deem to have occurred at the start of the test due to the open void required for such seal types. However, following the expansion of the intumescent layer, full closure of the cavity of Specimens A and B were deemed to occur at 3 minutes, and full closure of Specimen C was deemed to occur at 2 minute 30 seconds. Performance of the seals can then be measured from this point.

These requirements were satisfied for the periods shown below:

Test Results

Specimen	Integrity (minutes)	
	Cotton Pad	Sustained flaming
A	66*	66*
B	66*	66*
C	66*	66*

Insulation

The requirements of the standard are that the maximum temperature rise shall not be greater than 180°C. The Suspended thermocouples may exceed 180°C within the first five minutes of testing and in advance of the seal closing; once the seal has closed the maximum temperature rise shall not be greater than 180°C. Insulation failure also occurs simultaneously with integrity failure as specified in BS EN 1363-1: 2012.

These requirements were satisfied for the periods shown below:

Test Results

Specimen	Insulation (mins)
A	66*
B	66*
C	66*

* The test duration. The test was discontinued after a period of 66 minutes.

The failure criteria of each specimen was measured after the ventilated cavities had an effective seal by the means of the intumescent properties of the products and the findings were as follows:

Specimen	Cavity fully Sealed
A	3 minutes
B	3 minutes
C	2 minutes 30 seconds

Ongoing Implications

Limitations

The results relate only to the behaviour of the specimens of the element of construction under the particular conditions of test. They are not intended to be the sole criteria for assessing the potential fire performance of the element in use, nor do they reflect the actual behaviour in fires.

The results may not be applicable to situations where the joint widths, depths, orientations and supporting construction vary from those tested.

As no movement was induced into the specimens during the test there can be no evaluation of the performance of the seals where movement is induced in a building under actual fire conditions

Conclusions

Evaluation against objective

A fire resistance test has been conducted to assess the ability of three floor mounted specimens of 'open-state' cavity barrier sealing systems, to reinstate the integrity and insulation performance (as defined in prEN1364-6: 201X) of a simulated roof eaves construction, where adjacent structures abut.

Test Results:

When tested to the temperature and pressure conditions of BS EN 1363-1: 2012, in conjunction with the requirements of prEN1364-6: 201X, the requirements of the standard were satisfied for the following periods.

Technical failure of integrity of Specimens A to C would deem to have occurred at the start of the test due to the open void required for such seal types. However, following the expansion of the intumescent layer, full closure of the cavity of Specimens A and B were deemed to occur at 3 minutes, and full closure of Specimen C was deemed to occur at 2 minute 30 seconds. Performance of the seals can then be measured from this point. These requirements were satisfied for the periods shown below:

Ad hoc insulation criteria – The ad hoc measurement of insulation performance starts after the initial spike in temperature while the intumescent seal reacts. The temperature must drop below 180ºC above ambient within the first five minutes of testing. The insulation performance time is then given when 180ºC above ambient is reached for the second time.

Specimen	Integrity (mins)		Insulation (mins)
	Cotton pad	Sustained flaming	
A	66*	66*	66*
B	66*	66*	66*
C	66*	66*	66*

* The test was discontinued after a period of 66 minutes.

The failure criteria of each specimen was measured after the ventilated cavities had an effective seal by the means of the intumescent properties of the products and the findings were as follows:

Specimen	Cavity fully Sealed
A	3 minutes
B	3 minutes
C	2 minutes 30 seconds